LED Panel Light

CE Approved

LEDKinglight International Co., Ltd.

Tel: +86 755 36671702 Cell: +86 136 70087790 Email: sales@ledkinglight.com www.ledkinglight.com

ADD: NO. 2-5 Building, Tongfuyu Industrial Park, Shiyan Street, Baoan District, Shenzhen, China 518108

Contents

Step 1 Product

Step 2 Advanatge

Step 3 Hot-sell 45W-595*595mm

Step 4 FAQ

Step5 Contact

LEDKinglight International Co., Ltd.

Tel: +86 755 36671702 Cell: +86 136 70087790 Email: sales@ledkinglight.com www.ledkinglight.com

ADD: NO. 2-5 Building, Tongfuyu Industrial Park, Shiyan Street, Baoan District, Shenzhen, China 518108

Features

CE Standard, with isolated external power supply

PF>0.95, Power Efficiency >0.85

100-240V , 0-10V dimmable

Total Harmonic Distortion ⩽ 15 %

LGP 3mm thick, imported from Taiwan

3 years warranty

High efficiency: 80lm/w

4014SMD LED, Ra>80, LM80

Both dimmable & non-dimmable are available

Energy-saving & Super bright , saving 75% energy compared with traditional panel lights

LEDKinglight International Co., Ltd.

Tel: +86 755 36671702 Cell: +86 136 70087790 Email: sales@ledkinglight.com www.ledkinglight.com

ADD: NO. 2-5 Building, Tongfuyu Industrial Park, Shiyan Street, Baoan District, Shenzhen, China 518108

Structure Picture

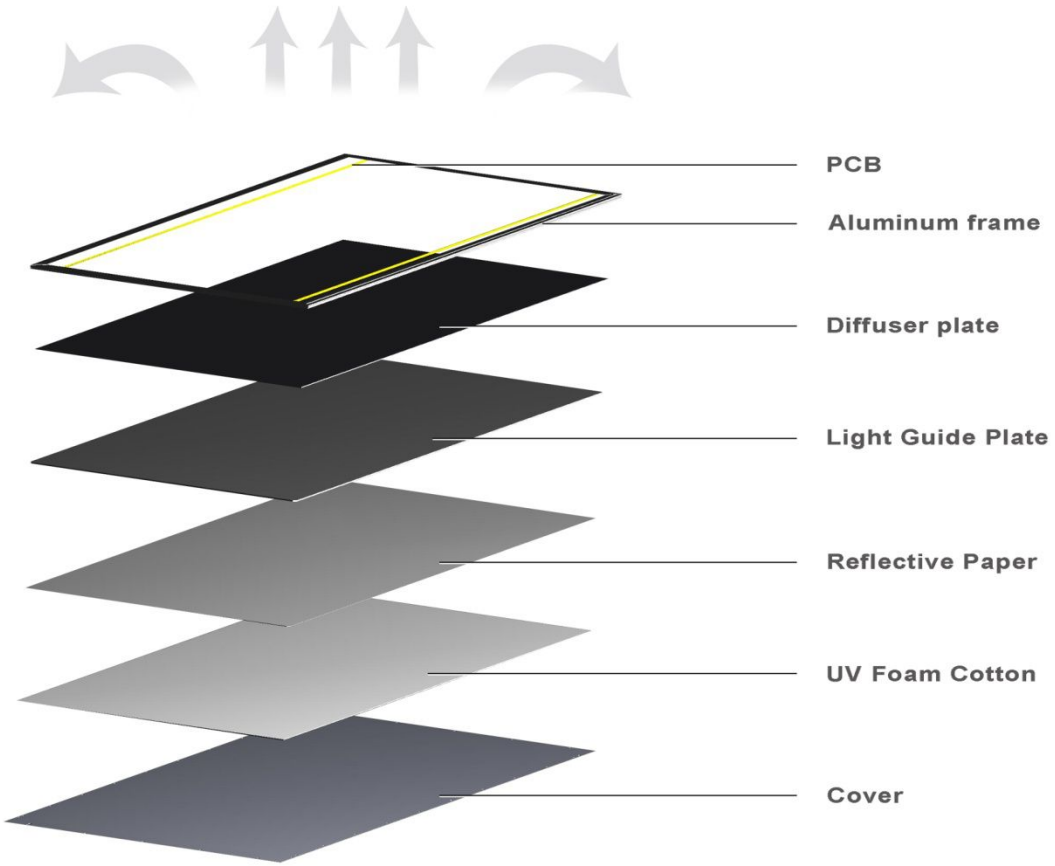

LEDKinglight International Co., Ltd.

Tel: +86 755 36671702 Cell: +86 136 70087790 Email: sales@ledkinglight.com www.ledkinglight.com

ADD: NO. 2-5 Building, Tongfuyu Industrial Park, Shiyan Street, Baoan District, Shenzhen, China 518108

SMD4014

Main Specification

Power:0.2W
Voltage:3.0-3.4V
Current:60mA
Size:4.0(L)*1.4(W)*0.7(T)mm
lumens:26-28LM
Color: Energy Star standard
CRI: >80ra
Life time:>50,000hrs

LM-80 chips testing report offeded , if need .

Why we choose SMD4014 ?
Not SMD2835 ???

1.Same fuctions with SMD2835
2. No Patent troubles if export
3. Price reducing trend
4.Liner chips ,much better for Panel light

LEDKinglight International Co., Ltd.
Tel: +86 755 36671702 Cell: +86 136 70087790 Email: sales@ledkinglight.com www.ledkinglight.com
ADD: NO. 2-5 Building, Tongfuyu Industrial Park, Shiyan Street, Baoan District, Shenzhen, China 518108

SMD4014 Testing

Data Set:	**Data Set 1, 55°C, 60mA**
Number of Units:	25
Failures Observed:	0
Test Interval and Test Duration:	0h,1000h,2000h,3000h,4000h,5000h,6000h
Average. Lumen Maintenance at 6000 hours:	97.04%
Average Chromaticity Shift at 6000 hours (Δu'v'):	0.0018
Reported TM-21 L_{70} Lifetime:	>36,000 hours

Data Set:	**Data Set 2, 85°C, 60mA**
Number of Units:	25
Failures Observed:	0
Test Interval and Test Duration:	0h,1000h,2000h,3000h,4000h,5000h,6000h
Average. Lumen Maintenance at 6000 hours:	96.24%
Average Chromaticity Shift at 6000 hours(Δu'v'):	0.0021
Reported TM-21 L_{70} Lifetime	>36,000 hours

LEDKinglight International Co., Ltd.

Tel: +86 755 36671702 Cell: +86 136 70087790 Email: sales@ledkinglight.com www.ledkinglight.com

ADD: NO. 2-5 Building, Tongfuyu Industrial Park, Shiyan Street, Baoan District, Shenzhen, China 518108

Aluminum Frame

Same Price

Silver Frame

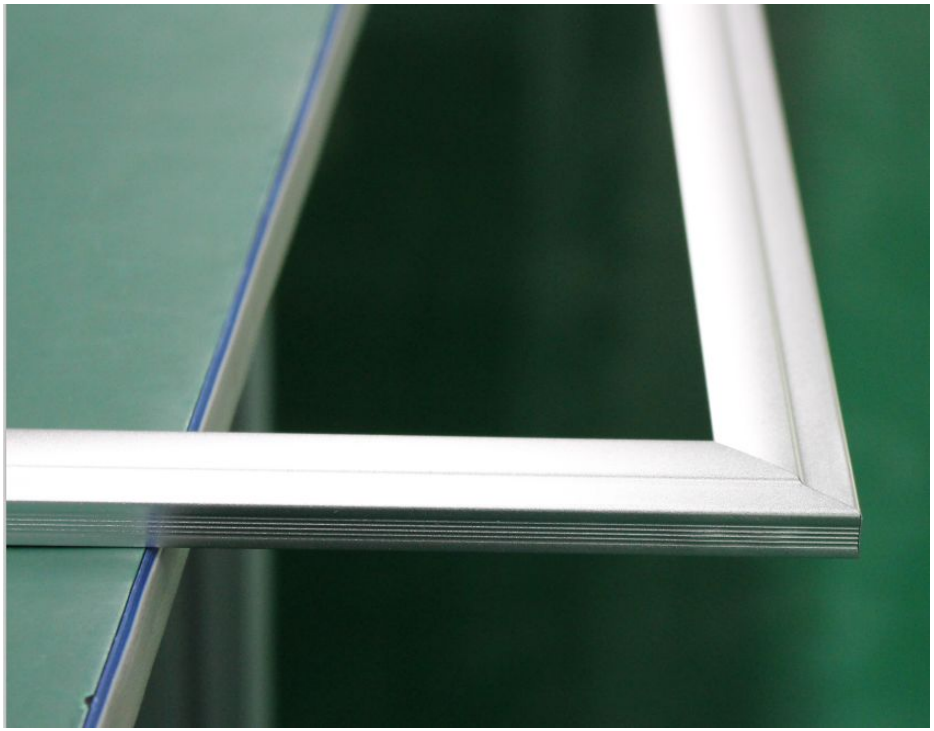

White Frame

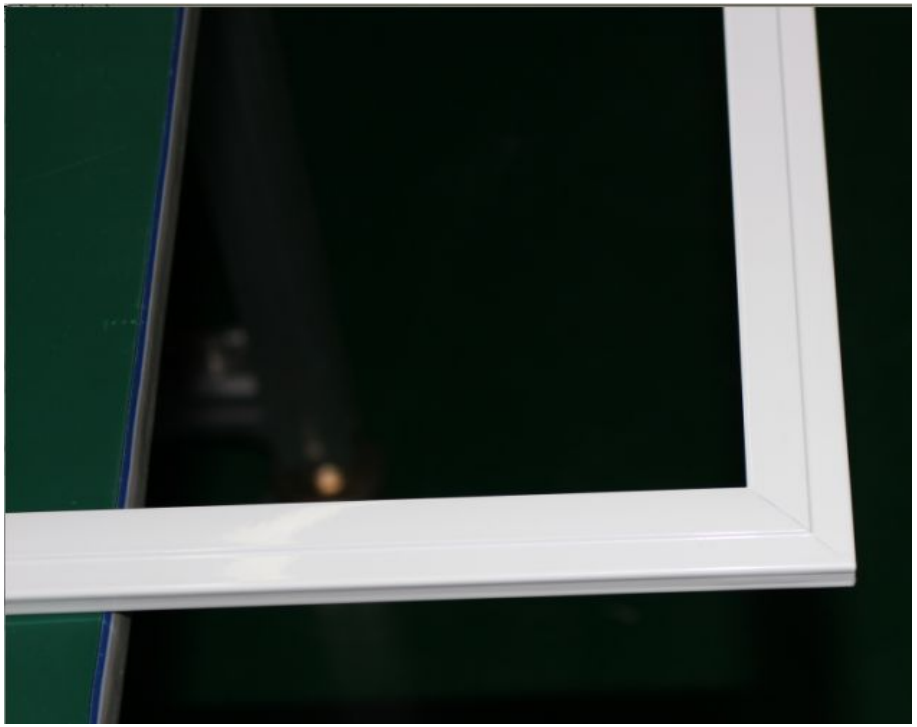

LEDKinglight International Co., Ltd.

Tel: +86 755 36671702 Cell: +86 136 70087790 Email: sales@ledkinglight.com www.ledkinglight.com

ADD: NO. 2-5 Building, Tongfuyu Industrial Park, Shiyan Street, Baoan District, Shenzhen, China 518108

Light Guide Plate-LEDKinglight

Material:**PMMA** from TaiWan
Mitsubishi Technology

Printing guide plate
by ourselves

Type A: 2.0T 2.0MM
Type B: 3.0T 3.0MM
Type C: 4.0T 4.0MM

Laser Dot guide plate

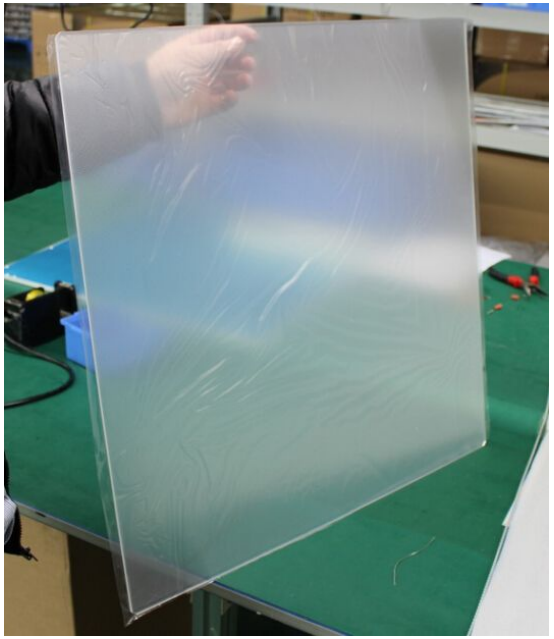

2.0T 2.0MM

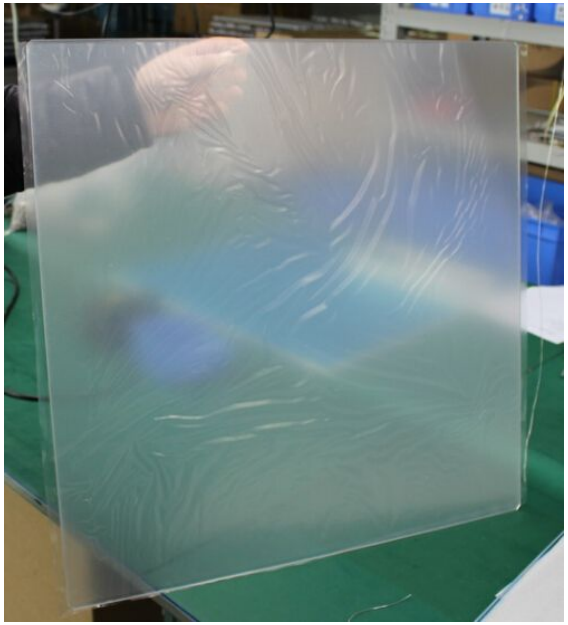

3.0T 3.0MM

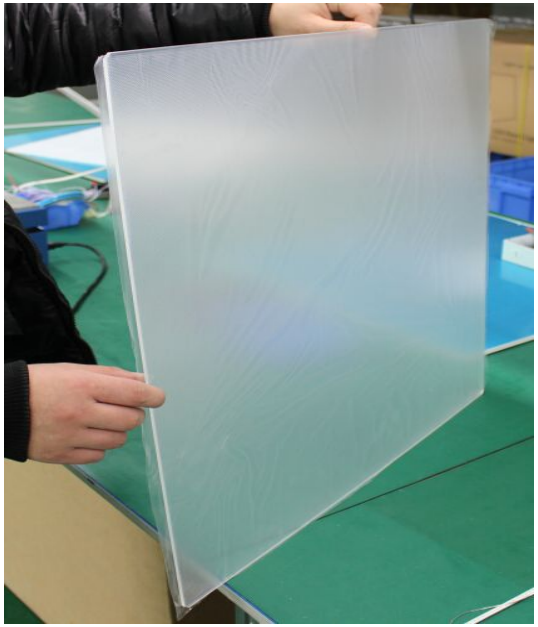

4.0T 4.0MM

LEDKinglight International Co., Ltd.
Tel: +86 755 36671702 Cell: +86 136 70087790 Email: sales@ledkinglight.com www.ledkinglight.com
ADD: NO. 2-5 Building, Tongfuyu Industrial Park, Shiyan Street, Baoan District, Shenzhen, China 518108

Diffuser Plate

1.PC-- Polycarbonate

1.Transmittance is relatively low, less 85%
2.Material properties is very stable
3.fire levels to meet European standards
4.Expensive price

2.PMMA--Acrylic

1.Transmittance is high , more than 90%
2.Also very stable , easy to broken
3.High price

3.PS--Polystyrene

Using

1.Has good chemical stability , optical properties
2.poor weather, outdoor easy to yellow brittle, bad heat sank
only used under70 degrees
3.Transmittance is more than 90%
4.Competitive price

4.PP--Polypropylene

1.Low Transmittance
2.Good Toughness
3.Easy to droop
4. Cheapest price

LEDKinglight International Co., Ltd.
Tel: +86 755 36671702 Cell: +86 136 70087790 Email: sales@ledkinglight.com www.ledkinglight.com
ADD: NO. 2-5 Building, Tongfuyu Industrial Park, Shiyan Street, Baoan District, Shenzhen, China 518108

Reflective Paper

PET material
1.More than 95% Reflectance
2.Erosion agaist, can put hydrochloric acid solution
3.High temperature agaist,ok for 150℃
4.Oxidation agaist, color never change with long time using
5.Any size can be cut easily
6.6-10years working life
7.Ip65 level

0.3mm size

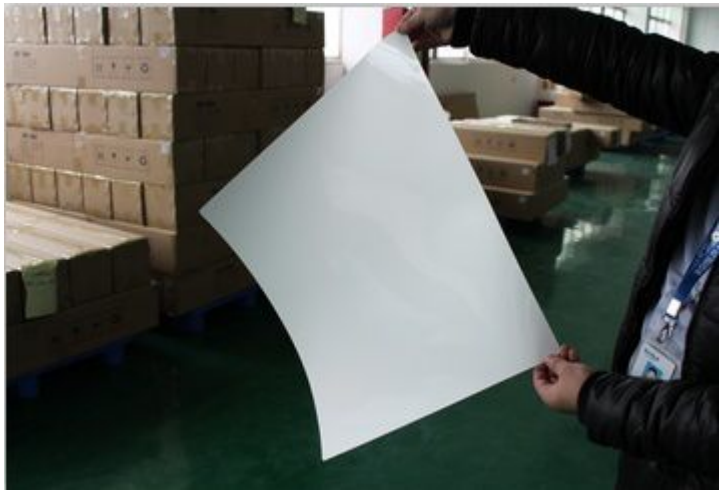

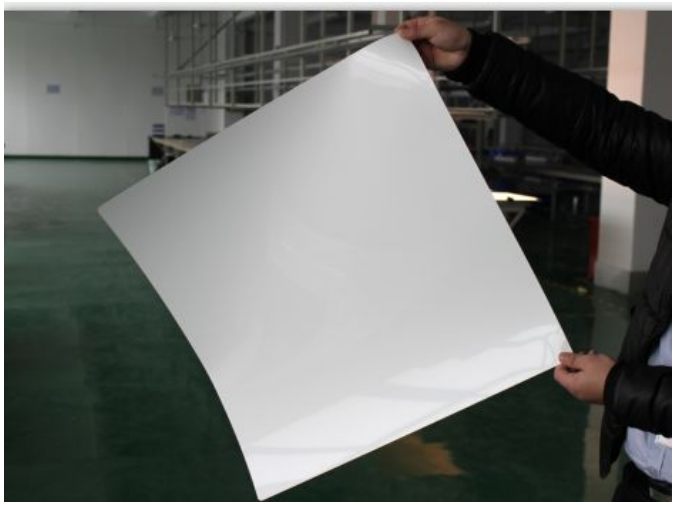

LEDKinglight International Co., Ltd.
Tel: +86 755 36671702 Cell: +86 136 70087790 Email: sales@ledkinglight.com www.ledkinglight.com
ADD: NO. 2-5 Building, Tongfuyu Industrial Park, Shiyan Street, Baoan District, Shenzhen, China 518108

Driver-LEDKinglight

Light +Driver =CE , our driver are CE approved too.

Advantage:

1 We design and produced by ourself , we control quality and cost
2.90-277V . THD 15% .PF>0.97(120V-0.99, 230V-0.97)
3.Two pressure-sensitive , anti- surge capability to meet the requirements of international standards and other related EMS
4.-30℃-45℃ working ,Short-circuit protection , overload protection, over voltage protection , over current protection , and soft start function
5. 50,000-175,000hours working life
6..EMC, LVD approved

LEDKinglight International Co., Ltd.
Tel: +86 755 36671702 Cell: +86 136 70087790 Email: sales@ledkinglight.com www.ledkinglight.com
ADD: NO. 2-5 Building, Tongfuyu Industrial Park, Shiyan Street, Baoan District, Shenzhen, China 518108

Our Driver division

IP44 UGR<19 Dimmable DALI .IES

LEDKinglight International Co., Ltd.

Tel: +86 755 36671702 Cell: +86 136 70087790 Email: sales@ledkinglight.com www.ledkinglight.com

ADD: NO. 2-5 Building, Tongfuyu Industrial Park, Shiyan Street, Baoan District, Shenzhen, China 518108

Driver Testing Report

The brand of capacitor are SKC,Beryl,etc. The brand of ic is ON-bright.

Our driver is isolated,past 3750V test.

For 105 degree(105 ℃),the life span of our panel light is over 5,000hours;

For 95 degree(95 ℃),the life span of our panel light is over 10,000hours;

For 85 degree(85 ℃),the life span of our panel light is over 20,000hours;

For 75 degree(75 ℃),the life span of our panel light is over 40,000hours;

For 65 degree(65 ℃),the life span of our panel light is over 80,000hours.

LEDKinglight International Co., Ltd.

Tel: +86 755 36671702 Cell: +86 136 70087790 Email: sales@ledkinglight.com www.ledkinglight.com

ADD: NO. 2-5 Building, Tongfuyu Industrial Park, Shiyan Street, Baoan District, Shenzhen, China 518108

Certification

CE and RoHs

Dimmable & non-dimmable

36w 2x2 ,45W 2X2 ,36W 1X4 ,45W 1X4,60W 2X2 ,72W 2X2

CE(3000-6000K)

Dimmable & non-dimmable

36w 2x2 ,45W 2X2 ,36W 1X4 ,45W 1X4,60W 2X2 ,72W 2X2

LEDKinglight International Co., Ltd.

Tel: +86 755 36671702 Cell: +86 136 70087790 Email: sales@ledkinglight.com www.ledkinglight.com

ADD: NO. 2-5 Building, Tongfuyu Industrial Park, Shiyan Street, Baoan District, Shenzhen, China 518108

Our Supplier Chain

sample production line

3 production lines

Panel light Capacity --45W 2x2ft size

1.300pcs LED tube/HOUR
2.3000pcs LED tube/DAY
3.18000pcs LED tube/WEEK
4.72000pcs LED tube/MONTH

LEDKinglight International Co., Ltd.

Tel: +86 755 36671702 Cell: +86 136 70087790 Email: sales@ledkinglight.com www.ledkinglight.com

ADD: NO. 2-5 Building, Tongfuyu Industrial Park, Shiyan Street, Baoan District, Shenzhen, China 518108

How produce ?

IP44 UGR<19 Dimmable DALI .IES

ICQ

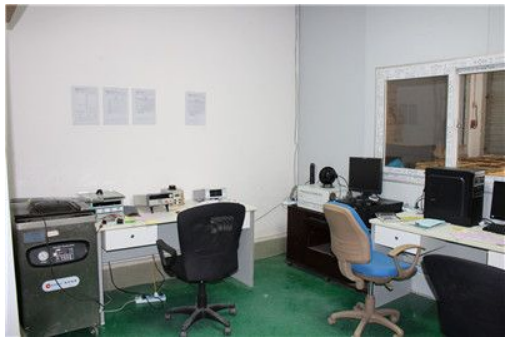

SMT

LGP Print

LGP Cut

Energy saving 70% | 3 Years warranty | AC 100V~240V | CE | CRI>80 PF>0.9

LEDKinglight International Co., Ltd.

Tel: +86 755 36671702 Cell: +86 136 70087790 Email: sales@ledkinglight.com www.ledkinglight.com

ADD: NO. 2-5 Building, Tongfuyu Industrial Park, Shiyan Street, Baoan District, Shenzhen, China 518108

IP44 UGR<19 Dimmable DALI .IES

Dry LGP

Producing

Aging

Testing

IES testing

Package

70% Energy saving | 3 Years warranty | AC 100V~240V | CE | CRI>80 PF>0.9

LEDKinglight International Co., Ltd.

Tel: +86 755 36671702 Cell: +86 136 70087790 Email: sales@ledkinglight.com www.ledkinglight.com

ADD: NO. 2-5 Building, Tongfuyu Industrial Park, Shiyan Street, Baoan District, Shenzhen, China 518108

Package Size

ITEM	N.W.	CARTON SIZE(cm)	Qty.	G.W.
595*595mm	3.6kg/pc	66*11*66	2pcs/CTN	8.2kg/CTN
295*1195mm	4.1kg/pc	127*11*36	2pcs/CTN	9.4kg/CTN
595*1195mm	6.4kg/pc	127*11*66	2pcs/CTN	14.5kg/CTN

LEDKinglight International Co., Ltd.

Tel: +86 755 36671702 Cell: +86 136 70087790 Email: sales@ledkinglight.com www.ledkinglight.com

ADD: NO. 2-5 Building, Tongfuyu Industrial Park, Shiyan Street, Baoan District, Shenzhen, China 518108

Hot-sell panel light 45W-595*595mm

IP44 UGR<19 Dimmable DALI .IES

Model	KL-6060-45WA-SKBNB
Power	**45W**
Voltage	AC100V～277（AC90～290V）
Size	**595*595*9mm**
Alumimun frame	White Free / Silver
Chips	SMD4014　384LEDS
Lumens	**3600±5%**
CCT	Energy star standard
CRI	80 Ra
Beam angle	120°
Dimmable	yes
Total Harmonic Distortion	⩽ 15 %
UGR	<19
Certification	CE, Rohs
Warranty	**3 years**

LEDKinglight International Co., Ltd.

Tel: +86 755 36671702　Cell: +86 136 70087790　Email: sales@ledkinglight.com　www.ledkinglight.com

ADD: NO. 2-5 Building, Tongfuyu Industrial Park, Shiyan Street, Baoan District, Shenzhen, China 518108

IES Testing Report

45W-595*595mm-4000K

Light Eff: 80LM/W

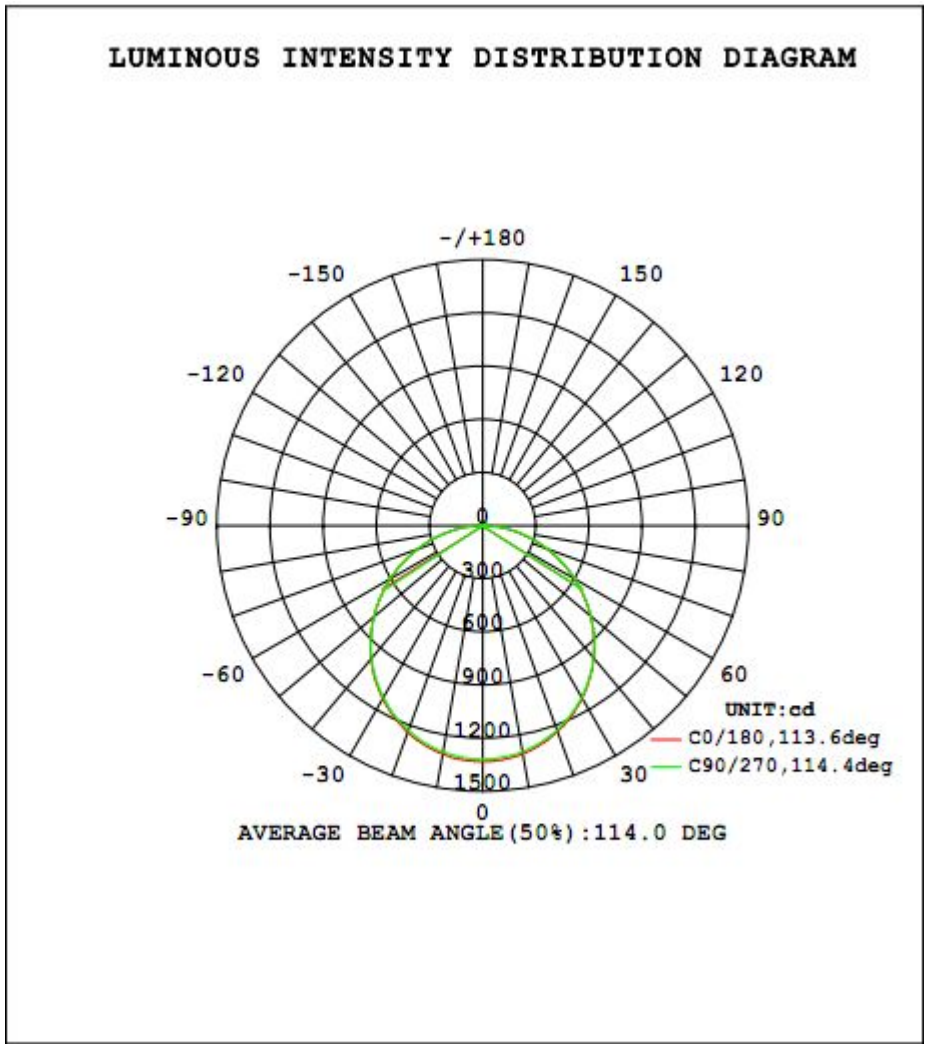

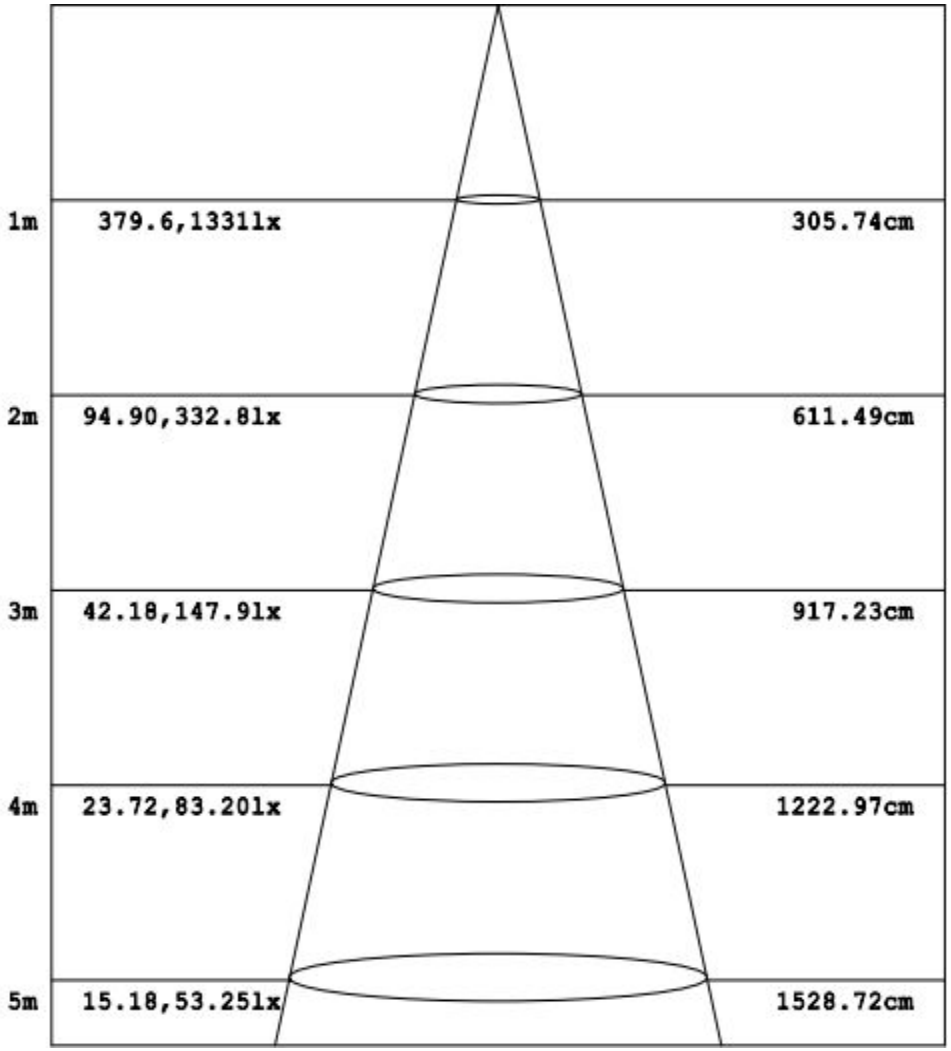

LEDKinglight International Co., Ltd.

Tel: +86 755 36671702 Cell: +86 136 70087790 Email: sales@ledkinglight.com www.ledkinglight.com

ADD: NO. 2-5 Building, Tongfuyu Industrial Park, Shiyan Street, Baoan District, Shenzhen, China 518108

Details PK

45W-595*595mm-4000K

IP44 UGR<19 Dimmable DALI .IES

LEDKinglight

VS

Others

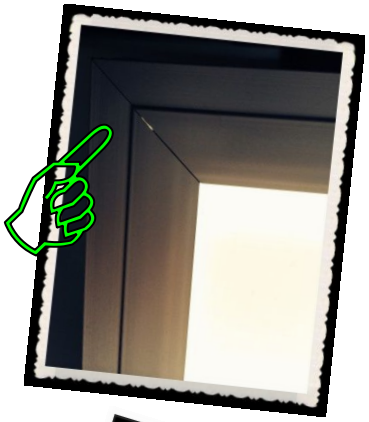

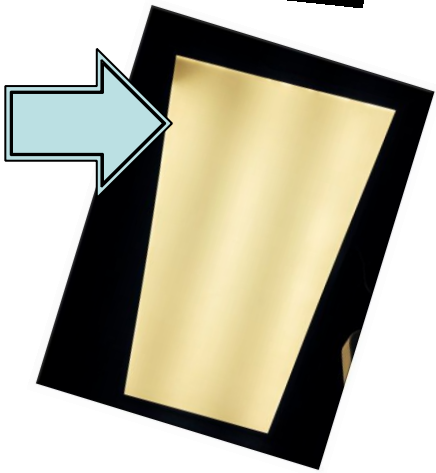

LEDKinglight International Co., Ltd.

Tel: +86 755 36671702 Cell: +86 136 70087790 Email: sales@ledkinglight.com www.ledkinglight.com

ADD: NO. 2-5 Building, Tongfuyu Industrial Park, Shiyan Street, Baoan District, Shenzhen, China 518108

Driver PK

45W-595*595mm -4000k

IP44 UGR<19 Dimmable DALI .IES

LEDKinglight

VS

LEDKinglight International Co., Ltd.

Tel: +86 755 36671702 Cell: +86 136 70087790 Email: sales@ledkinglight.com www.ledkinglight.com

ADD: NO. 2-5 Building, Tongfuyu Industrial Park, Shiyan Street, Baoan District, Shenzhen, China 518108

Dimmable & Non-dimmable Wire connection

IP44 UGR<19 Dimmable DALI .IES

45W-595*595mm-4000K

Wiring of panel light with 0-10V dimmable drive

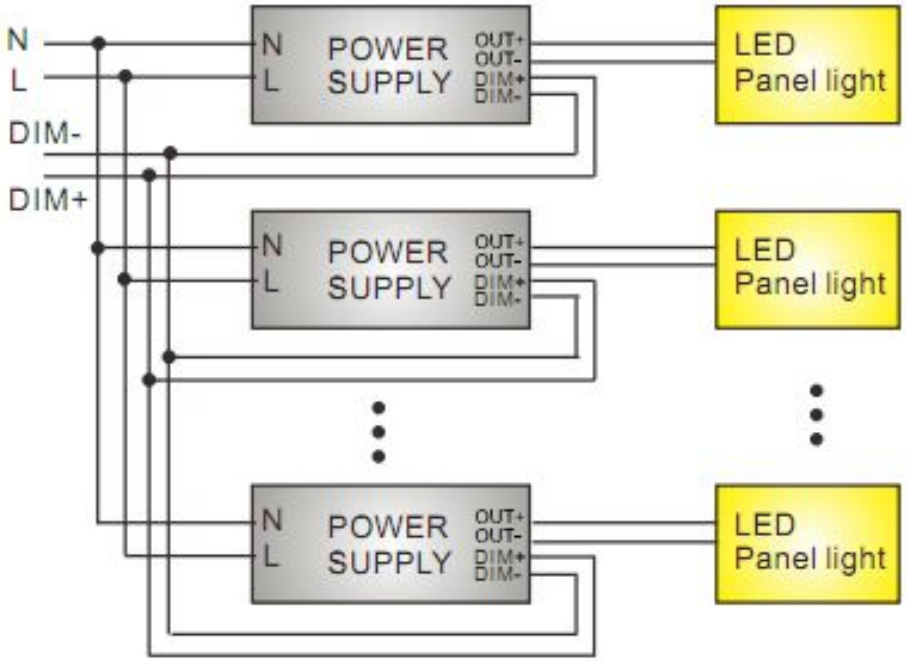

Wiring of panel light with 0-10V non-dimmable drive

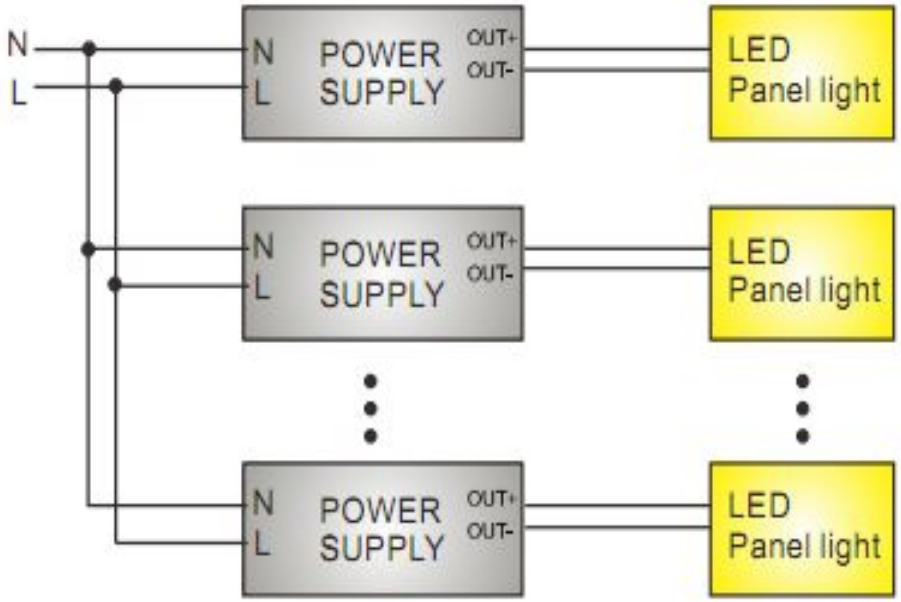

LEDKinglight International Co., Ltd.

Tel: +86 755 36671702 Cell: +86 136 70087790 Email: sales@ledkinglight.com www.ledkinglight.com

ADD: NO. 2-5 Building, Tongfuyu Industrial Park, Shiyan Street, Baoan District, Shenzhen, China 518108

Installations

IP44 UGR<19 Dimmable DALI .IES

A. Recessed mount

Recessed Mount

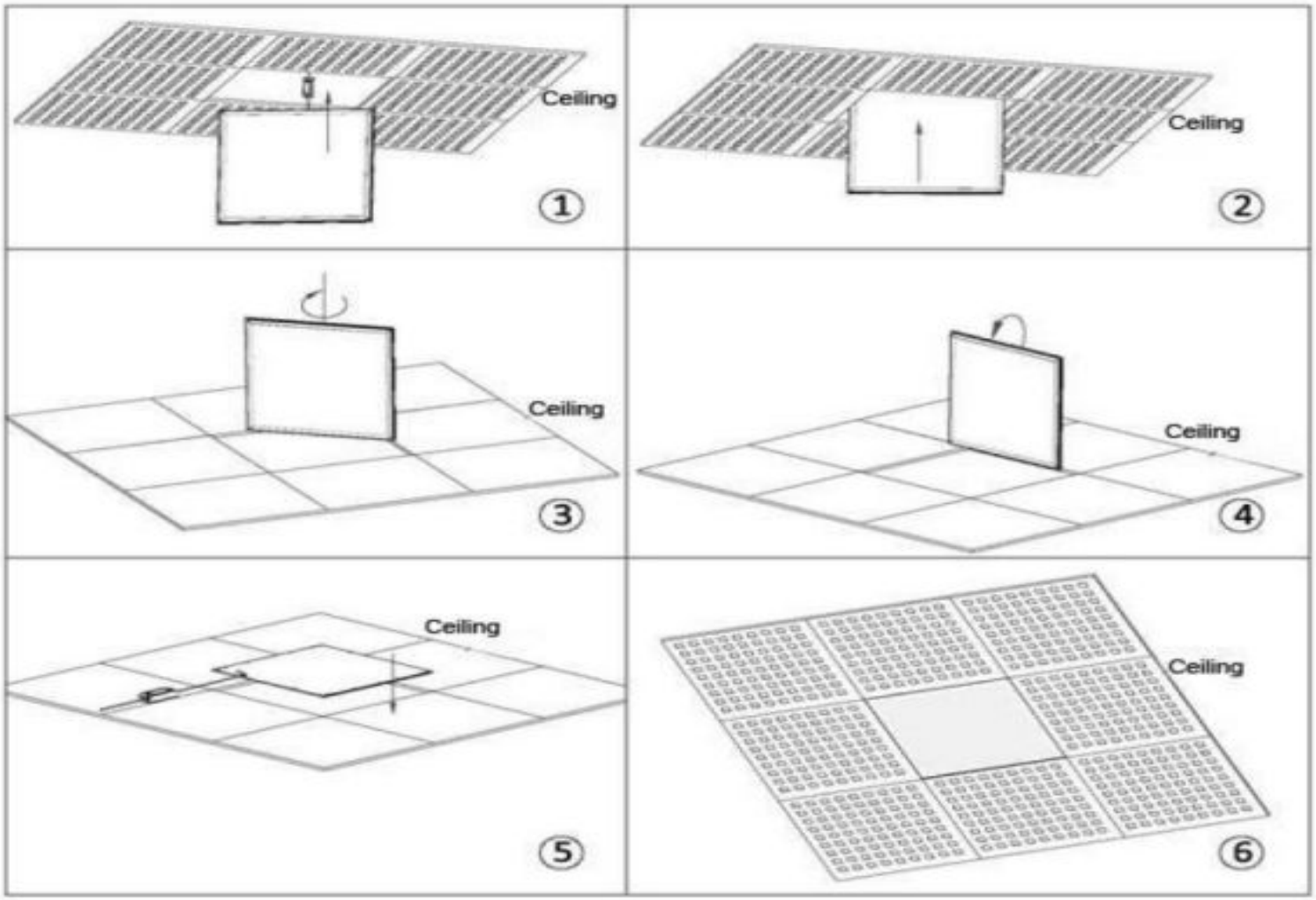

LED Kinglight

Installations

IP44 UGR<19 Dimmable DALI .IES

B. Suspension

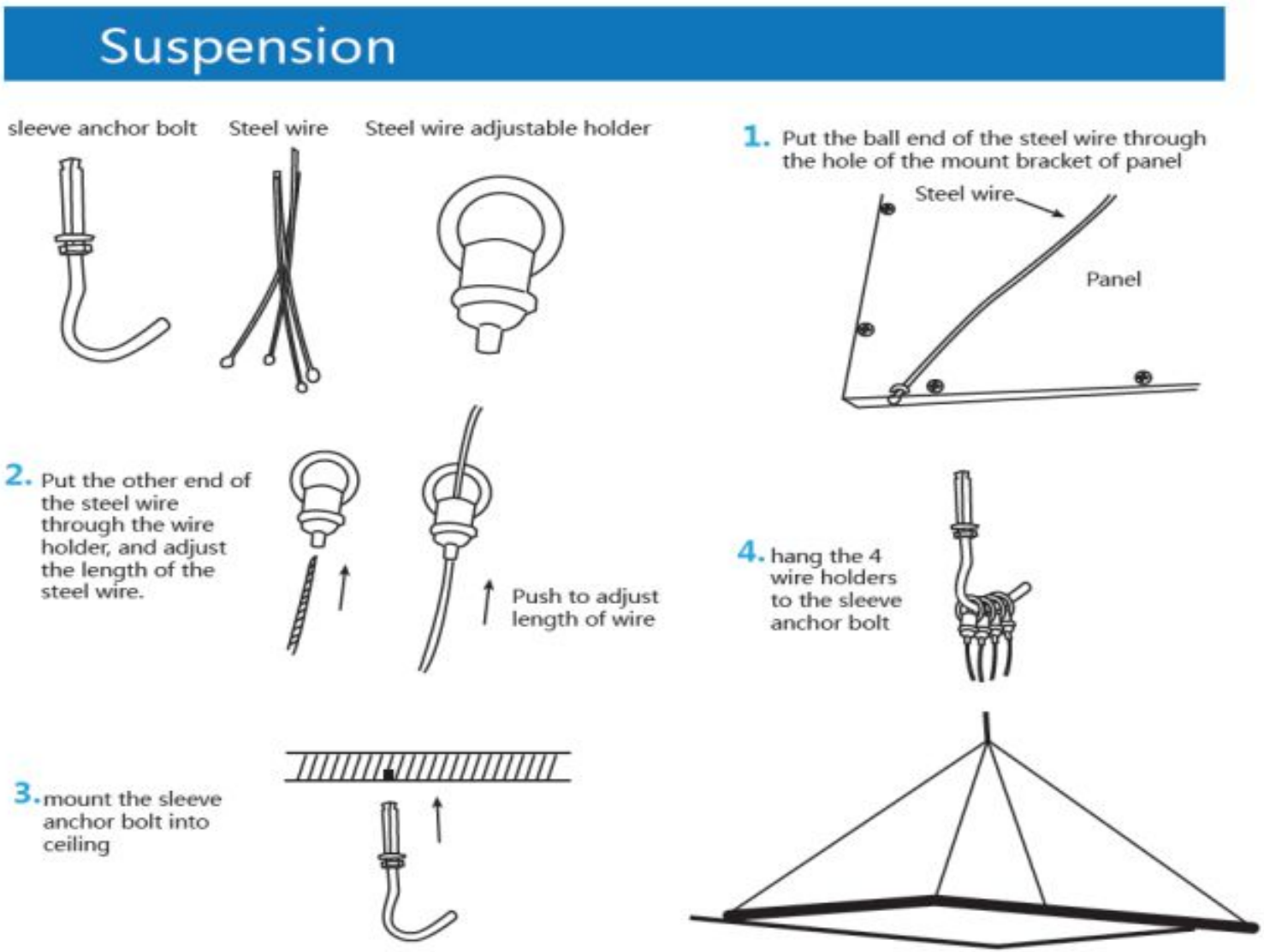

Installations

IP44 | UGR<19 | Dimmable | DALI | .IES

A. Ceiling mount

Ceiling mount

1. dis-assemble the front panel of the mounting frame and mount the frame into ceiling by setscrew.

2. slide the LED panel into the mounting frame, then screw in the front panel

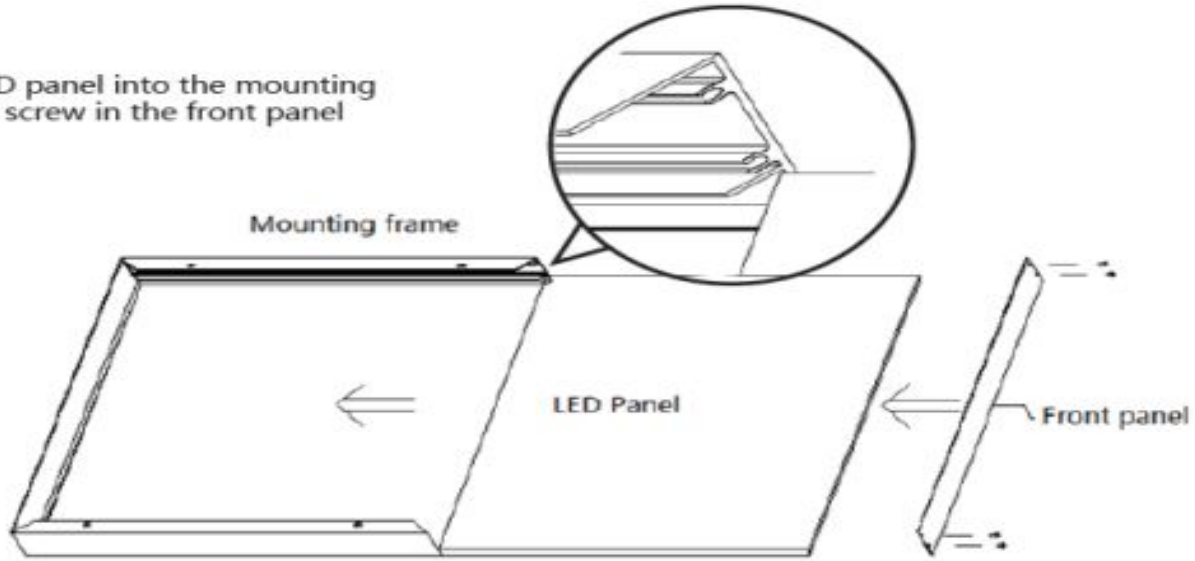

Kinglight

Package

IP44 UGR<19 Dimmable DALI .IES

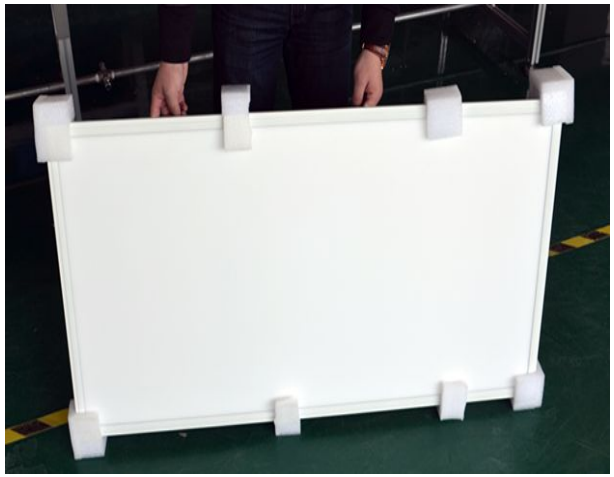

45W-595*595mm-4000K

LEDKinglight International Co., Ltd.

Tel: +86 755 36671702 Cell: +86 136 70087790 Email: sales@ledkinglight.com www.ledkinglight.com

ADD: NO. 2-5 Building, Tongfuyu Industrial Park, Shiyan Street, Baoan District, Shenzhen, China 518108

Right size for your market

Europe Market

Power	Size (Ft)	Size(MM)
36W	2*2	595*595*9
45W	2*2	595*595*9
36W	1*4	295*1195*9
45W	1*4	295*1195*9
60W	2*4	595*1195*9
72W	2*4	595*1195*9

LEDKinglight International Co., Ltd.

Tel: +86 755 36671702 Cell: +86 136 70087790 Email: sales@ledkinglight.com www.ledkinglight.com

ADD: NO. 2-5 Building, Tongfuyu Industrial Park, Shiyan Street, Baoan District, Shenzhen, China 518108

FAQ

1. Are you factory?
Yes.

2. Can leadtime be more shorter because I am urgent?
Yes, please contact us urgently to check the details.

3. I want high quality LED panel light, can you do?
Yes, we will provide famous brand high quality LED chips & drivers & LGP

4.Can we do our brand? Can you print or emboss our logo on the tank? And our own brand box?
Yes! Yes! Yes! we can be OEM/ODM

5. If there are some lights that can not work when i receive the goods?
Don't worry, we will give you same quantity of good lights for compensation in your next order.

6. How many years does your company focus on LED lighting industry ?
Since 2009, 6 years experence producing

7.How does your factory do regarding quality control?
Quality is priority. LEDKinglight people always attach great importance to quality controlling from the very beginning to the very end.

8. If Testing report and IES files can offered ?
of course ,we can offer these . we have the professional
testing Instruments and Machines ,also professioanl testing engineers

9. how many can your produce within one month ? if i need 45w 2x2ft ?
300pcs LED tube/HOUR
3000pcs LED tube/DAY
18000pcs LED tube/WEEK
72000pcs LED tube/MONTH

LEDKinglight International Co., Ltd.
Tel: +86 755 36671702 Cell: +86 136 70087790 Email: sales@ledkinglight.com www.ledkinglight.com
ADD: NO. 2-5 Building, Tongfuyu Industrial Park, Shiyan Street, Baoan District, Shenzhen, China 518108

Our Service

A, Contact us for **good price.**

B, If you need, We can send you **samples** to check.

C, Confirm other details such as delivery time, payment, shipment.

D, You pay the **deposit.**

E, After produce finished, we send the **sample for your check** if you need, then you finish **payment**.

F, We arrange **shippment**. And send **documents** for your custom clearance.

G, When you got the goods, tell us the comments then we can do better next time.

H, Will **share** latest price or other news of your goods anytime if you need.

LEDKinglight International Co., Ltd.

Tel: +86 755 36671702 Cell: +86 136 70087790 Email: sales@ledkinglight.com www.ledkinglight.com

ADD: NO. 2-5 Building, Tongfuyu Industrial Park, Shiyan Street, Baoan District, Shenzhen, China 518108

How to cooperate with LEDKinglight ?

IP44 UGR<19 Dimmable DALI .IES

一.Sample offered (3-5days)

1.how mant watt ?
2. what is voltage?
3.what size ?
4.white free or silver frame ?
5.Warm /Nature/Day/Cool white ?
6.how many need ?
7.When will you need ?

二.Payment Iterm

1.Sample cost
2.shipping cost charged
3. 100% finished
4. Paypal ,T/T

三.Delivery Iterm

1.3-5days after payment
2. Fedex, DHL,UPS,TNT
3.IES files offered

LEDKinglight International Co., Ltd.
Tel: +86 755 36671702 Cell: +86 136 70087790 Email: sales@ledkinglight.com www.ledkinglight.com
ADD: NO. 2-5 Building, Tongfuyu Industrial Park, Shiyan Street, Baoan District, Shenzhen, China 518108

Contact

Sales Manager : Sally Zou
E-mail : sally@ledkinglight.com

Tel:+86 755 3667 1702
Mob: +86 136 7008 7790

Web: www.ledkinglight.com

Skype: ledkinglight-sally

Address:NO.2-5 building, Tongfuyu Industrial Area, Aiqun Road, Shiyan, Bao'an District, Shenzhen, Guangdong, China 518108