3 AXIS ROBOT SYSTEM

Concept

1. Anyone can handle that easily due to only 3 axis NC program.
2. The unit is controlled by NC of machine.
   It is easy operation.
   No need another controller.
3. Capacity (inc. hand device) is 20kg.

3 AXIS ROBOT SYSTEM

Development concept

1. Simple configuration
   Hand unit is moved as keeping horizontal position by link mechanism.

   ⇩

   Front and backward: U axis
   Rotation: V axis
   Up and down: W axis

2. Simple operation
   Anyone can operate by NC controller of Machine. (FANUC 0i-MF Plus)

   ⇩

   This NC unit can control 2 path system.
   One is machining program.
   Another one is robot program.
   It can run 2 programs at the same time.

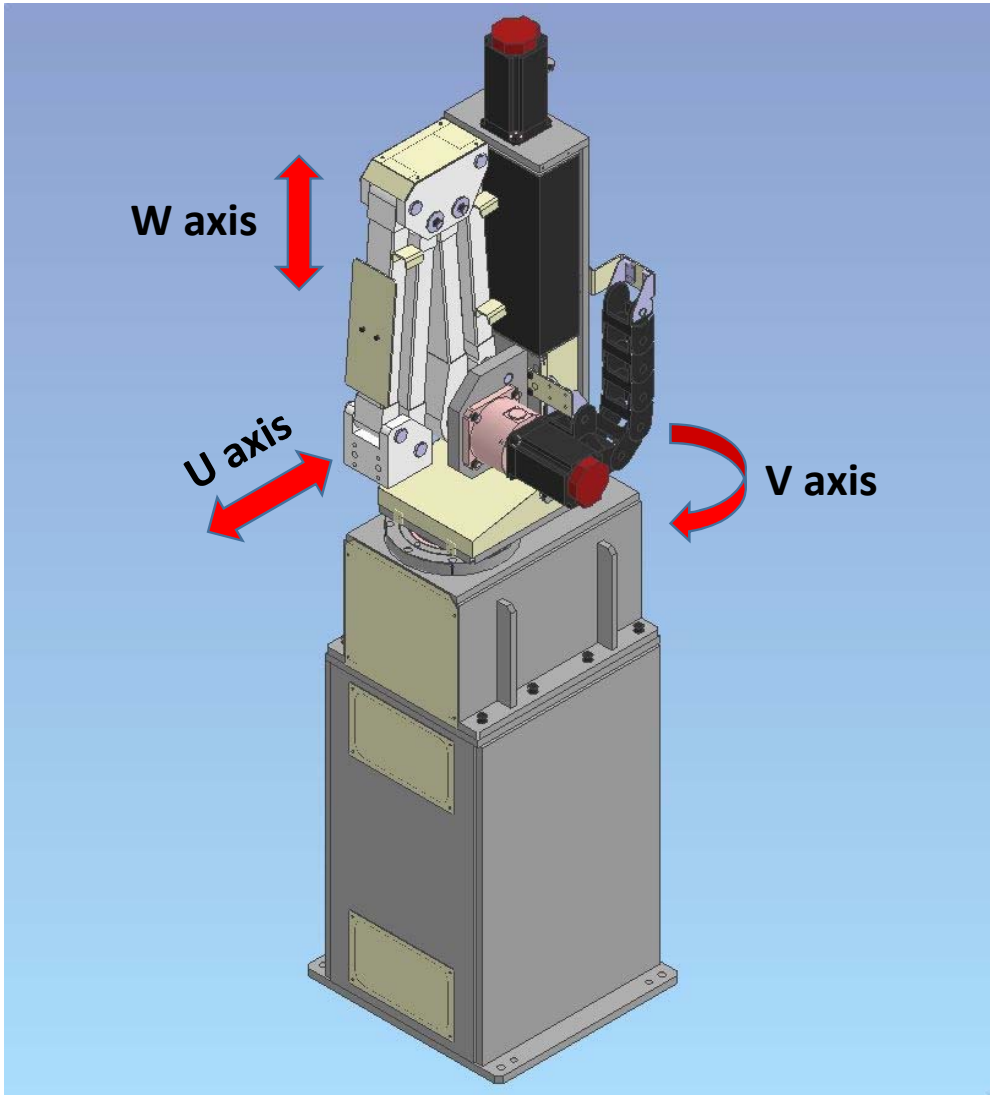

3 AXIS ROBOT SYSTEM

Development concept

Capacity: 20kg (inc. hand device)

Block of arm end has 2 faces as front side and underside which are prepared screw holes and knock holes for mounting hand device.

⇩

You can install various hand unit.

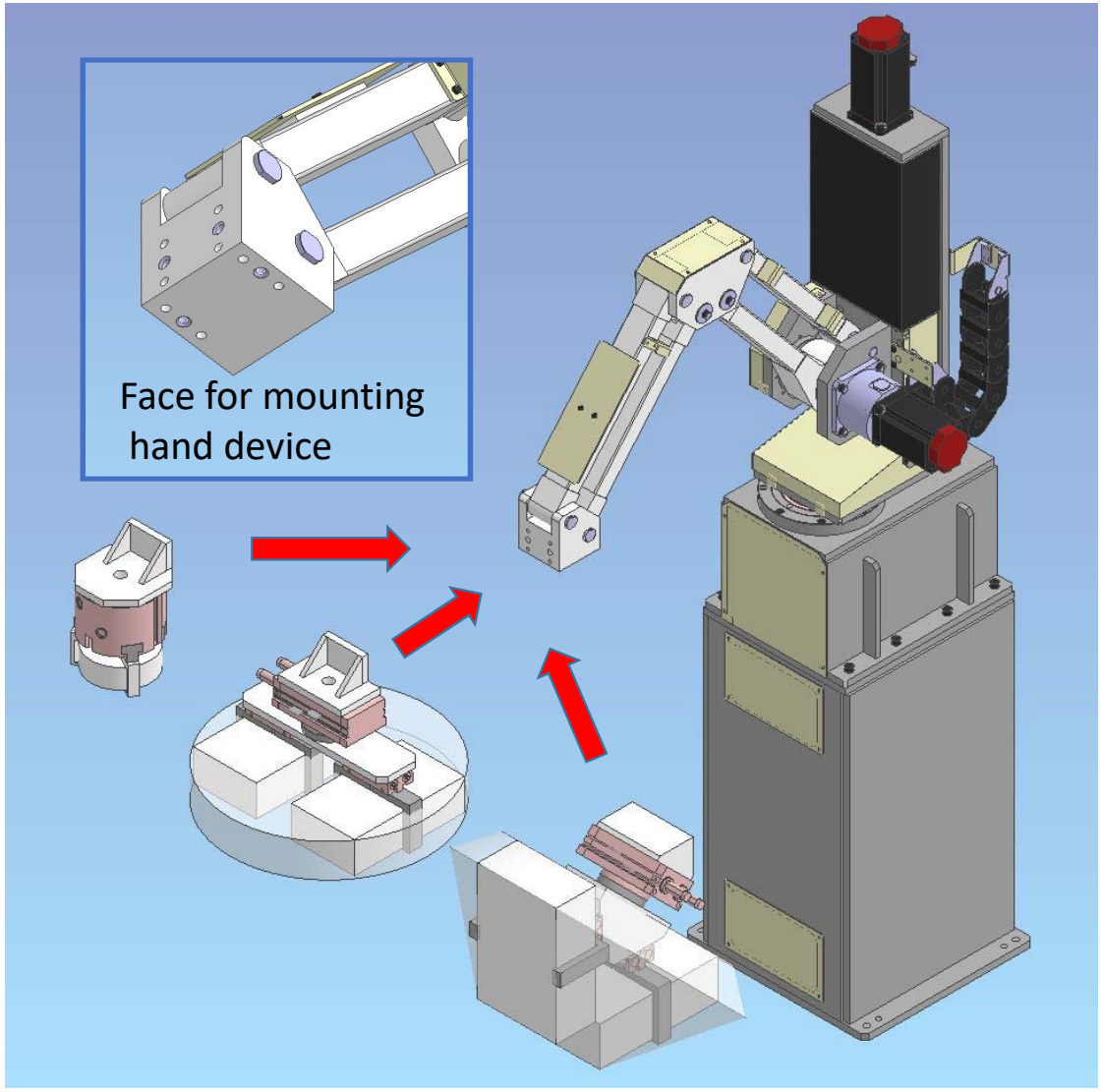

3 AXIS ROBOT SYSTEM

Example (1)

Installation at auto side door

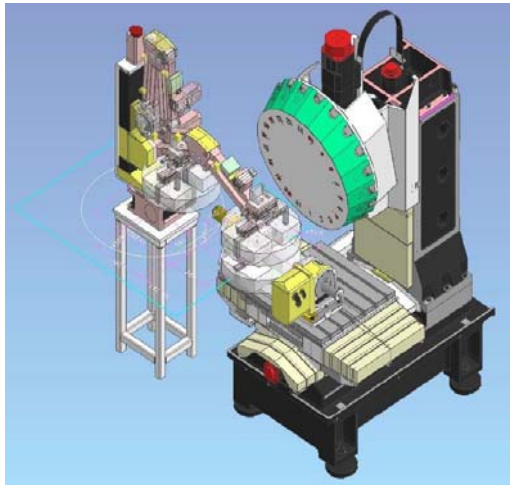

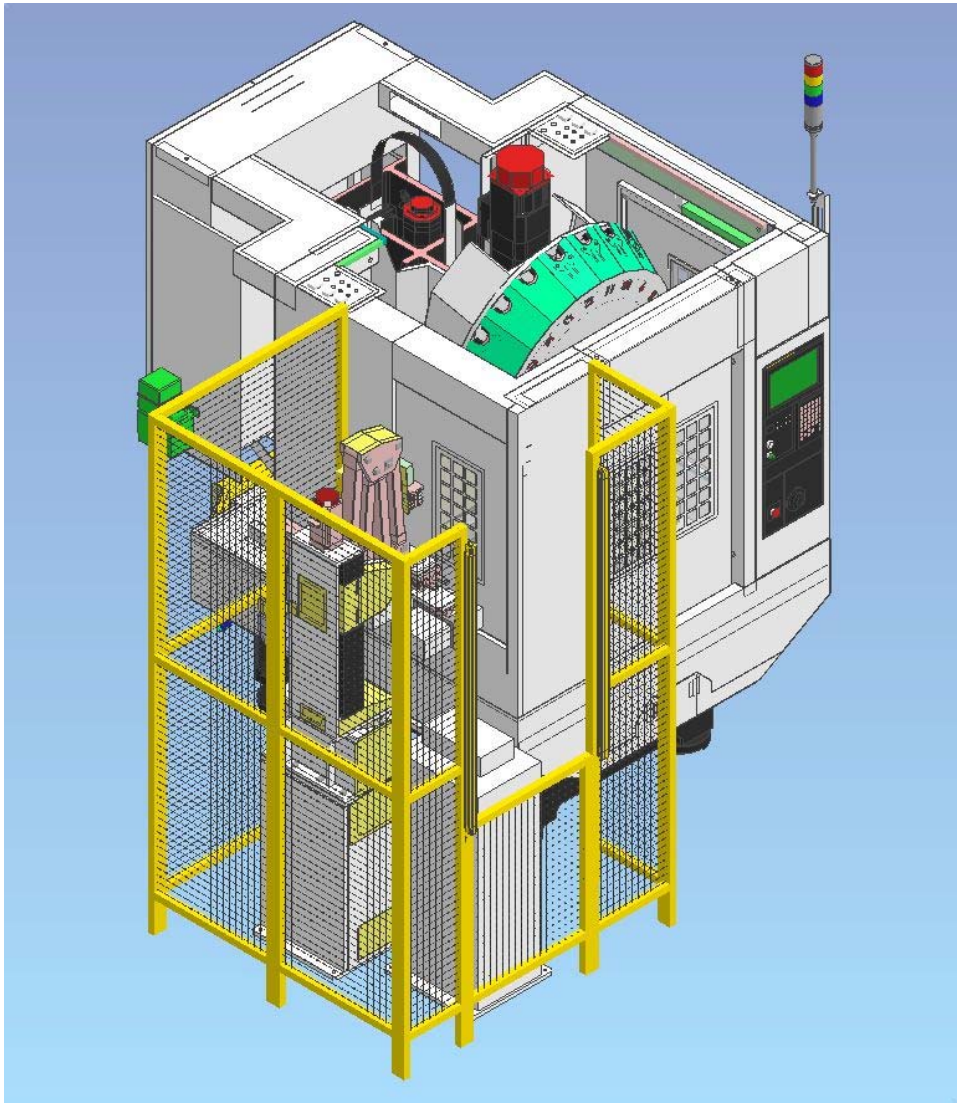

3 AXIS ROBOT SYSTEM

Example (2)
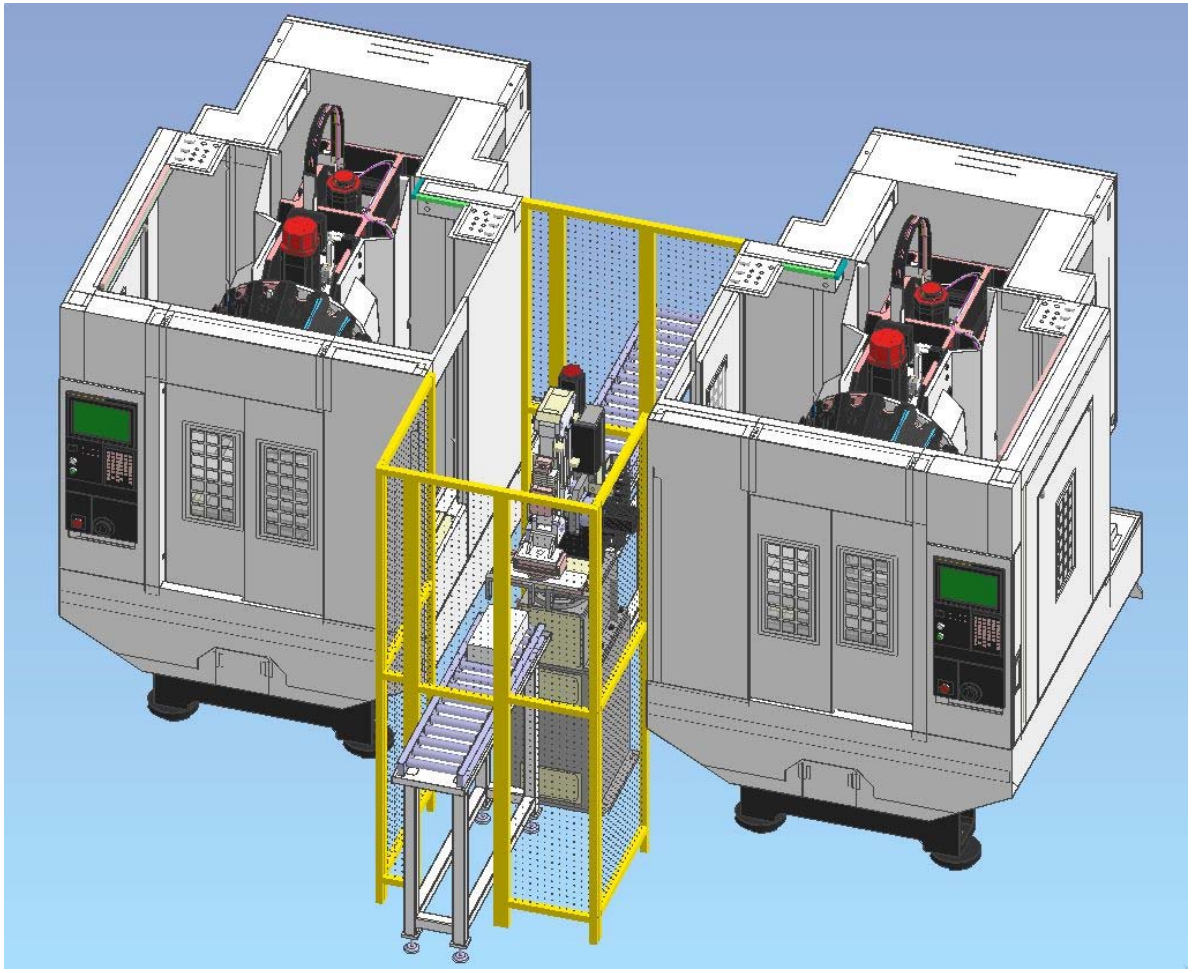
Multiple units connected